# Domex - Direct Drive

DX06, 8, 10 & 11

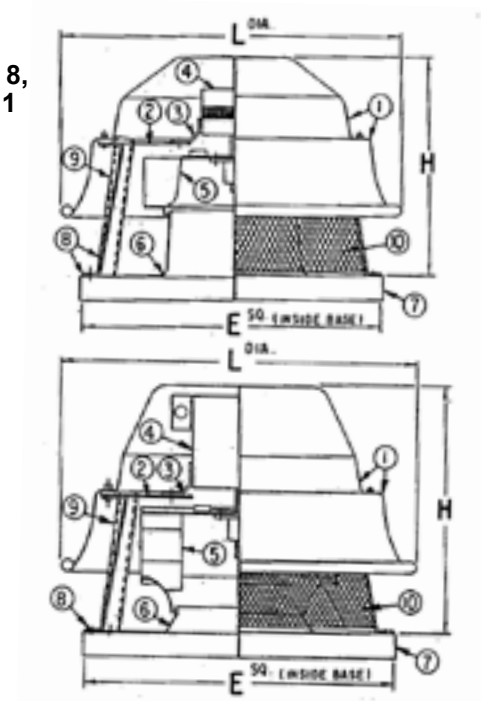


DX16

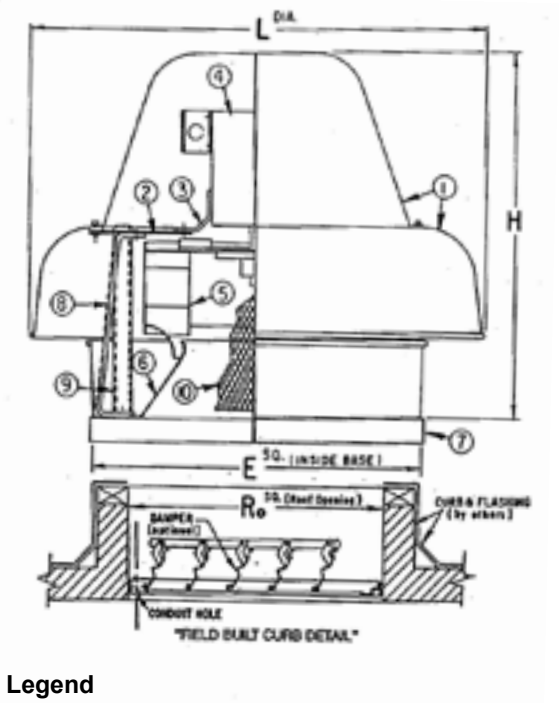


DX13

**Legend**

1. Hood - Discharge Apron
2. Top Plate
3. Motor Mounting Brackets
4. Motor
5. Centrifugal Fan (with Cooling Vanes)
6. Spun Venturi
7. Mounting Base
8. Structural Support Braces
9. Conduit Guide
10. Aluminum Bird Screen

## Dimensional Data

| | Standard Direct Drive Models | | | | | | |
|---|---|---|---|---|---|---|---|
| | DX06R | DX08SR | DX10SR | DX11VSR/Q | DX13VSR/Q | DX16VSR DX16Q1, Q2 | DX18V |
| L DIA. | 18 7/8 | 20 7/8 | 20 7/8 | 20 7/8 | 21 7/16 | 28 1/2 | 39 |
| H | 12 5/8 | 13 3/8 | 13 3/8 | 13 3/8 | 14 3/4 | 22 1/2 | 31 |
| E† SQ. | 18 1/2 | 18 1/2 | 18 1/2 | 18 1/2 | 18 1/2 | 20 1/2 | 28 1/2 |
| Ro SQ. | 9 | 9 | 11 1/2 | 11 1/2 | 11 1/2 | 16 | 20 |

| | Green Plus Direct Drive Models | | | | | |
|---|---|---|---|---|---|---|
| | DX08SR | DX10SR | DX11VSR/Q | DX13VSR/Q | DX16VSR DX16Q1, Q2 | DX18V |
| L DIA. | 21 7/16 | 21 7/16 | 21 7/16 | 21 7/16 | 28 1/2 | 39 |
| H | 17 1/2 | 18 1/2 | 18 1/2 | 18 1/2 | 22 1/2 | 31 |
| E† SQ. | 18 1/2 | 18 1/2 | 18 1/2 | 18 1/2 | 20 1/2 | 28 1/2 |

† Outside dimension of curb should be 1 1/2" less than 'E' dimension.

All dimensions in inches.