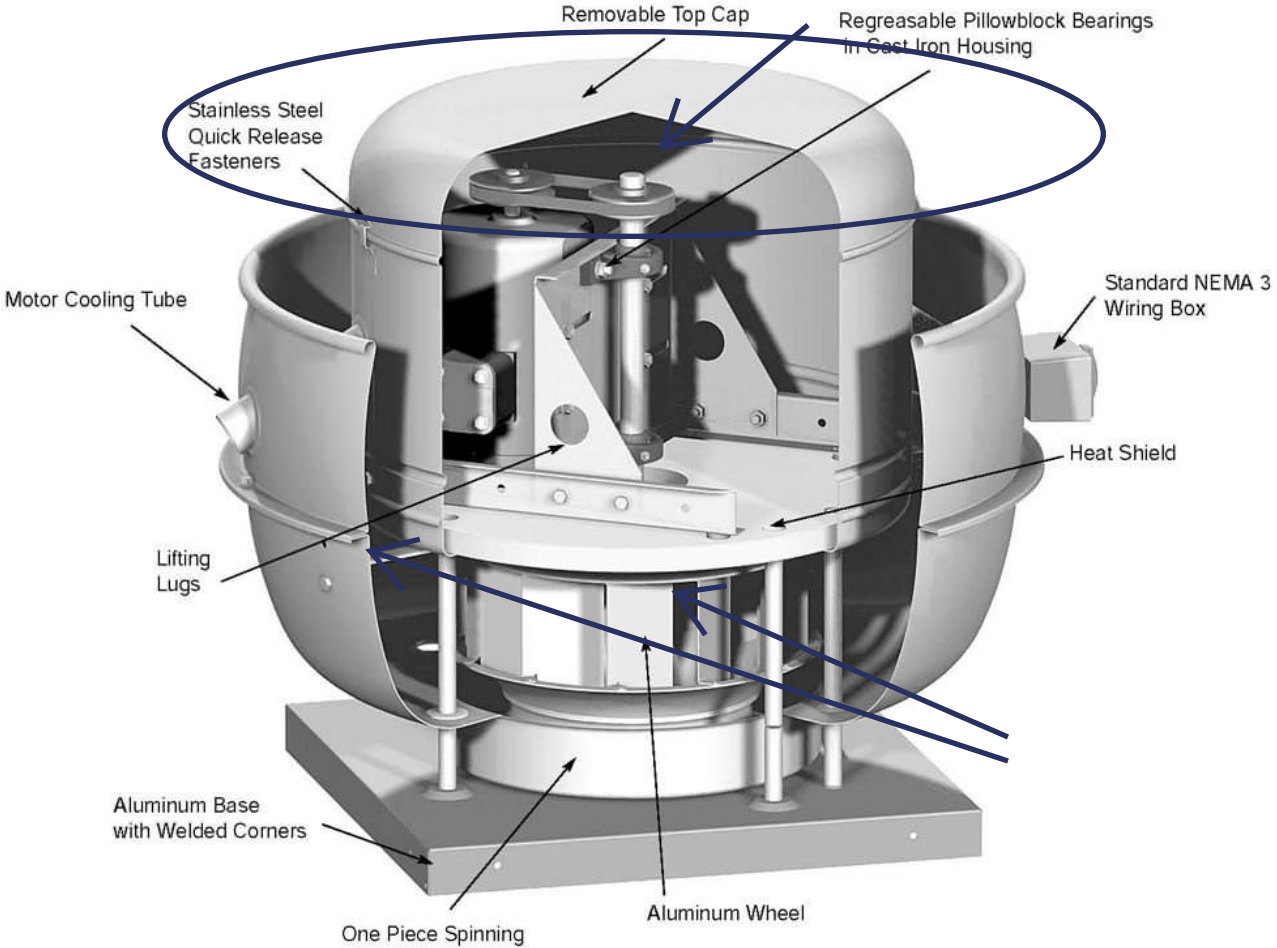
Removable Top Cap
Regreasable Pillowblock Bearings
in Cast Iron Housing
Stainless Steel
Quick Release
Fasteners
Motor Cooling Tube
Standard NEMA 3
Wiring Box
Heat Shield
Lifting
Lugs
Aluminum Base
with Welded Corners
One Piece Spinning
Aluminum Wheel