industry supply

COOK

Loren Cook Company certifies that the ACRUD, ACRUD-HP and ACRUD-XP shown herein are licensed to bear the AMCA Seal. The ratings shown are based on tests and procedures performed in accordance with AMCA Publication 211 and AMCA Publication 311 and comply with the requirements of the AMCA Certified Ratings Program.

Type ACRUD, ACRUD-HP and ACRUD-XP are furnished standard with UL 705 and cUL 705 listings (Power Ventilator/ZACT).

ACRUD Dimension Data

Size	A	B	C			G	T Sq.	Roof Opening Square*	Ship. Wt.
			ACRUD	ACRUD-HP	ACRUD-XP				
70	10-3/4	17-1/8	13-3/8	-	-	2	18	13-1/2	20
90	13-1/4	21-1/8	16-3/8	-	-	2	18	13-1/2	28
100	13-1/4	21-1/8	16-3/8	-	-	2	18	13-1/2	30
120	19-1/16	30-3/16	28-1/8	-	-	2	20	15-1/2	67
135	19-1/16	30-3/16	28-5/8	-	-	2	20	15-1/2	72
150	20-15/16	34-11/16	30-1/4	27-1/2	-	2	24	19-1/2	87
165	20-15/16	34-11/16	30-3/4	27-3/4	26-11/16	2	24	19-1/2	90
180	24-13/16	39-7/16	35-7/8	33-3/8	31-7/16	3	30	25-1/2	102
195	24-13/16	19-7/16	-	33-1/2	32-1/8	3	30	25-1/2	110

All dimensions in inches. *Roof opening size for curbs supplied by Loren Cook Company only. Weights in pounds.

Size 70 - 100

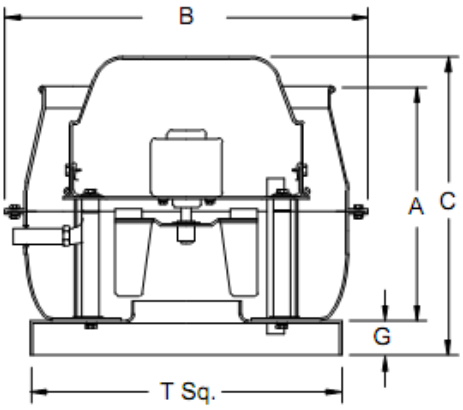

Size 120 - 180

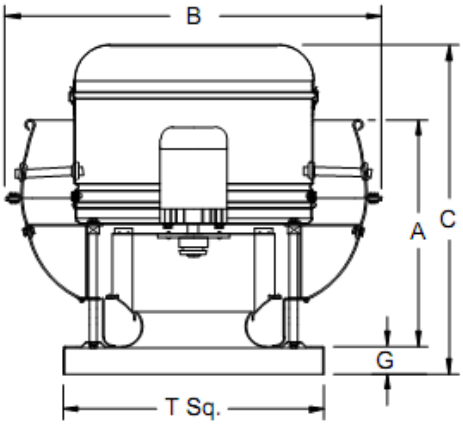

Loren Cook Company certifies that the ACRUD, ACRUD-HP and ACRUD-XP shown herein are licensed to bear the AMCA Seal. The ratings shown are based on tests and procedures performed in accordance with AMCA Publication 211 and AMCA Publication 311 and comply with the requirements of the AMCA Certified Ratings Program.

Type ACRUD, ACRUD-HP and ACRUD-XP are furnished standard with UL 705 and cUL 705 listings (Power Ventilator/ZACT).

150-180 ACRUD

Cat. No.	Mtr. HP	Fan RPM	Tip Speed	0.000" SP		0.125" SP		0.250" SP		0.375" SP		0.500" SP		0.625" SP		0.750" SP		0.875" SP		1.000" SP		1.250" SP		1.500" SP	
				Sone	BHP	Sone	BHP	Sone	BHP	Sone	BHP	Sone	BHP	Sone	BHP	Sone	BHP	Sone	BHP	Sone	BHP	Sone	BHP	Sone	BHP
150R10D	1/3	1075	4225	2272		2154		2035		1910		1775		1601		1258									
				12.1	.23	12.1	.25	11.9	.26	11.4	.27	10.8	.27	10.2	.27	9.6	.25								
150R11D	1/3	1140	4477	2409		2298		2186		2071		1948		1808		1948									
				13.9	.27	13.9	.29	13.7	.31	13.3	.32	12.7	.32	12.1	.32	12.7	.32								
150R13D	3/4*	1300	5105	2747		2650		2553		2453		2351		2244		2351		1989		1791					
				18.0	.41	18.0	.43	18.0	.45	17.6	.46	17.2	.47	16.6	.47	17.2	.47	15.6	.48	15.1	.48				
150R15D		1550	6087	3275		3194		3113		3030		2947		2862		2947		2685		2590		2365		1979	
				24	.69	24	.72	24	.74	24	.76	23	.78	23	.79	23	.78	22	.80	22	.81	21	.82	21	.79
165R10D	1/3	1075	4644	2925		2728		2543		2359		2156		1981		1696									
				14.9	.37	14.9	.38	14.8	.39	14.4	.39	13.8	.39	13.3	.39	12.8	.39								
165R11D	3/4	1140	4924	3194		3041		2894		2753		2602		2428		2602		2050							
				16.9	.48	16.9	.50	16.9	.52	16.4	.54	16.0	.55	15.4	.55	16.0	.55	14.4	.55						
180R10D	3/4	1075	5066	4065		3936		3805		3667		3518		3344		3518		2899		2646					
				16.4	.61	16.4	.63	16.3	.65	15.6	.67	14.9	.69	14.4	.70	14.9	.69	13.6	.70	13.2	.69				
180R11D	3/4	1140	5369	4310		4189		4066		3939		3803		3653		3474		3261		3047					
				17.9	.73	17.9	.75	17.9	.77	17.2	.79	16.5	.81	15.9	.83	15.5	.84	15.2	.84	14.8	.83				